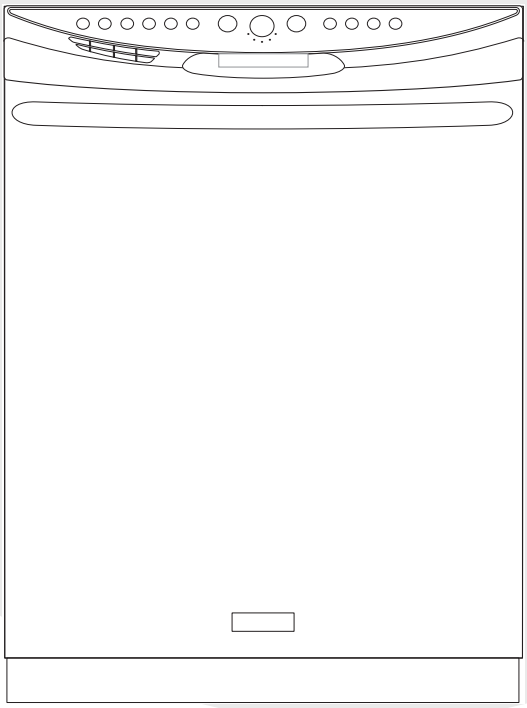

Frigidaire

Factory Parts Catalog

Product No.	PLD2560LCC2
Series	24" Built-in
Color	stainless
Owner's Guide	154482801
Service Data Sheet	154476701
Energy Guide	154540018
Installation Instructions	154427301
Market	North America

24-INCH BUILT-IN DISHWASHER

Model No.
PLD2560LC

Publication No.
5995424297
04/12/14
(EN/SERVICE/ECL)
821

CONTROL PANEL

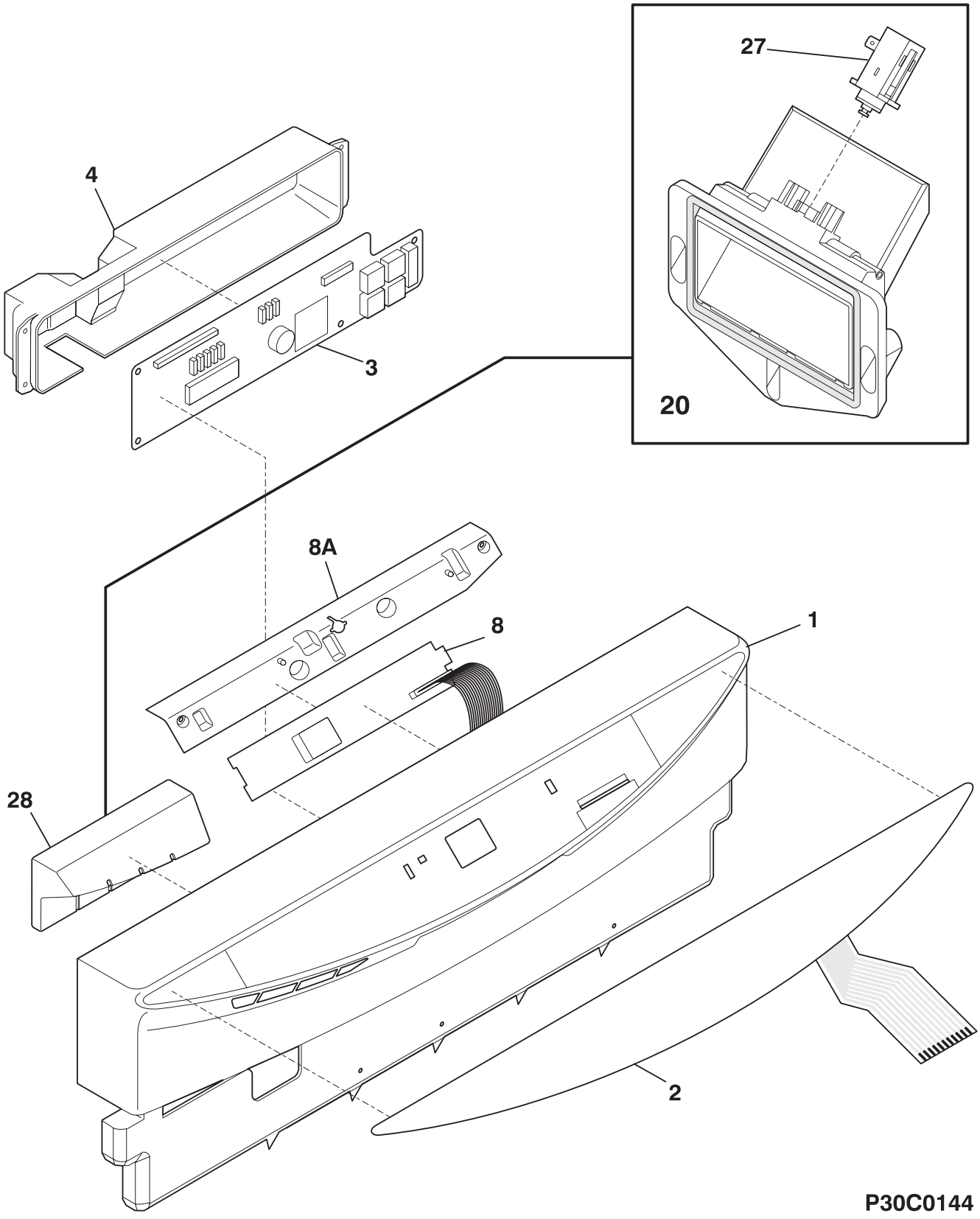

CONTROL PANEL

POS. NO	PART NO.	DESCRIPTION
1 #	154486103	Panel, control, black
2	154459903	Insert, control panel, black, w/12p switch
3 #	154470605	Control, w/display
3*	154200401	Screw, 6-10 x 3/8, pan plask
4	154460601	Cover, control
4*	154478901	Gasket, cover
8	154474801	Board, segment display
8*	5303318719	Screw, mtg.
8A	154486201	Shield, tactile switch
20	154423601	Vent assy, active dry, w/actuator
20*	154436201	Screw, dry duct, (3)
27	154433501	Actuator, active dry vent
28	154474401	Adapter, vent
* #	154470501	Wiring Harness
*	154540018	Energy guide label

DOOR

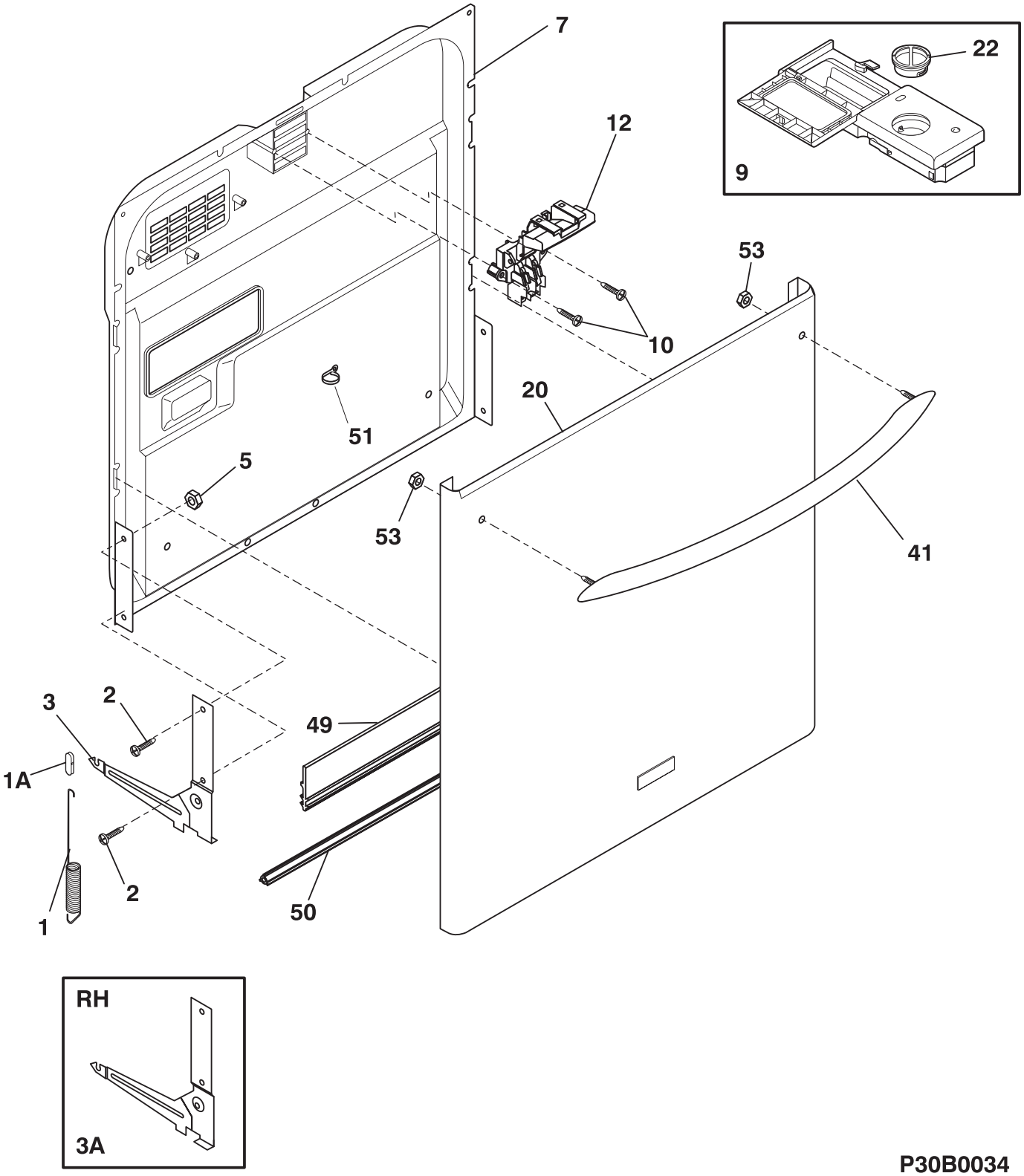

P30B0034

DOOR

POS. NO	PART NO.	DESCRIPTION
1	154430601	Spring, door, (2)
1A	154325201	Linkage, door spring, (2)
2	154093301	Screw, arm assy, (4)
3	154325302	Arm Assy, LH
3A	154325301	Arm Assy, RH
*	154400601	Pin, arm assy
5	154079601	Nut, arm assy, and handle mtg.
7	154299004	Door, inner assy
9	154230104	Dispenser, det/rinse aid, includes #22
9*	154294701	Screw, #7 plas .375, (6), disp. assy.
10	154103702	Screw, latch mtg, (2)
12 #	154475103	Latch assy, black
12*	154532701	Spacer, latch
20	154533201	Door, stainless, w/badge
20*	154253201	Insulation, door
20*	5304428306	Screw, door mtg., (2)
22	154388801	Cap, Rinse aid
41	154470405	Towel bar assy, stainless
49	154297603	Gasket, door, bottom
50	154211401	Support, door hinge
51	154320301	Clamp, drip loop, wire
53	154425001	Nut, Keps, (2), handle mtg.
*	154200601	Screw, #10-16 x 3/8

TUB

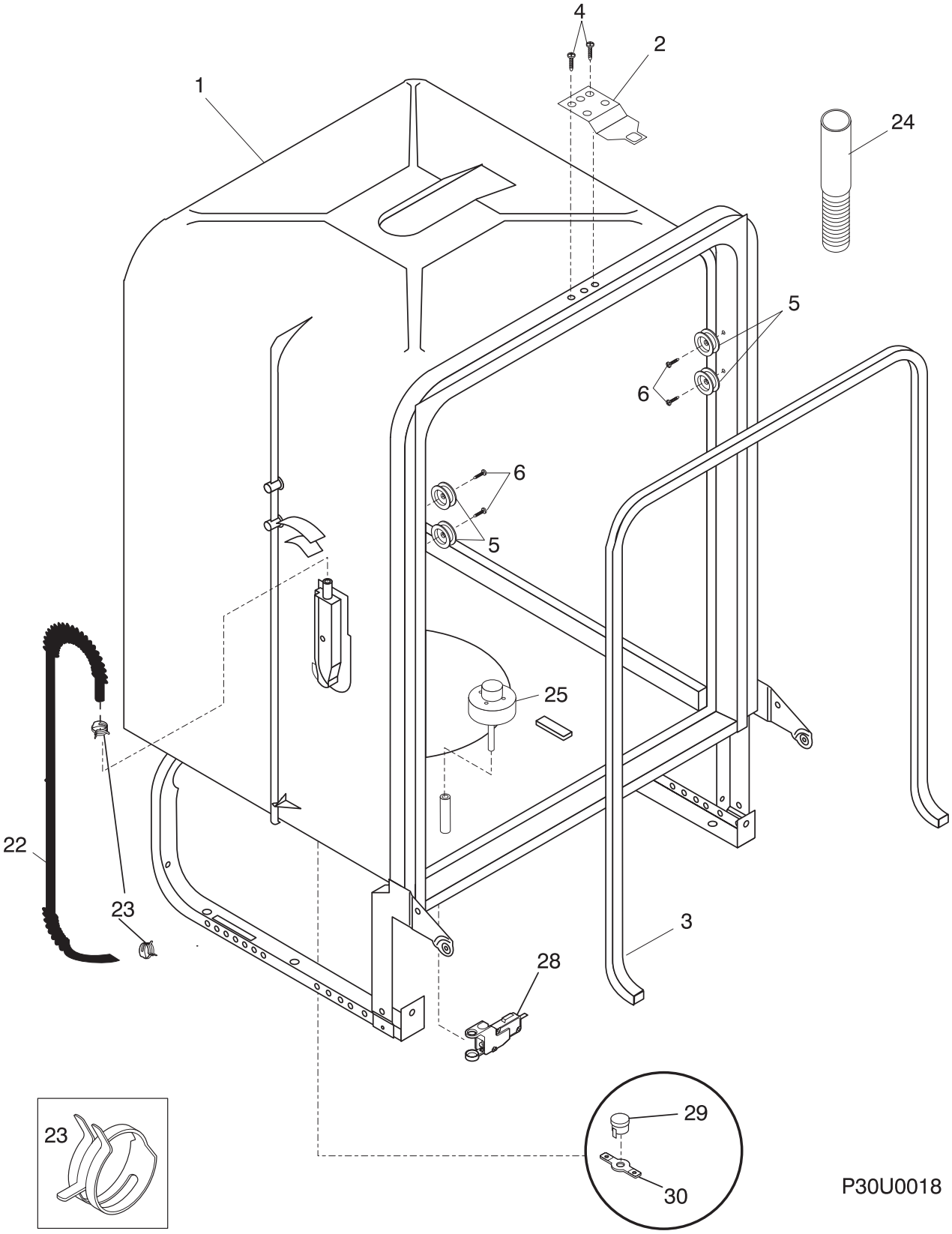

TUB

POS. NO	PART NO.	DESCRIPTION
1 #	154209301	Tub assy, w/frame parts
2	154429101	Strike, door
3 #	154211801	Gasket, tub
4	154200602	Screw, 10-16 x 3/8, hex
5	154333902	Roller, tub
6	5303943103	Screw, w/washer, (8)
22	154446001	Tubing, water inlet
23	5303318539	Clamp, tubing, (2)
24 #	154525301	Hose, drain
25 #	154209701	Float
28	154408701	Switch Assy, float
29 #	154290204	Thermostat, re-settable
30	154241101	Retainer, thermostat
30*	154297701	Screw, retainer-thermo
*	154447102	Insulation, blanket
*	154447301	Insulation, tub back
*	154041001	Screw, plask #1, 10-10 x 9/16
*	5300807270	Screw, (2), countertop mtg.

Functional Parts
* Non-Illustrated Parts

MOTOR & PUMP

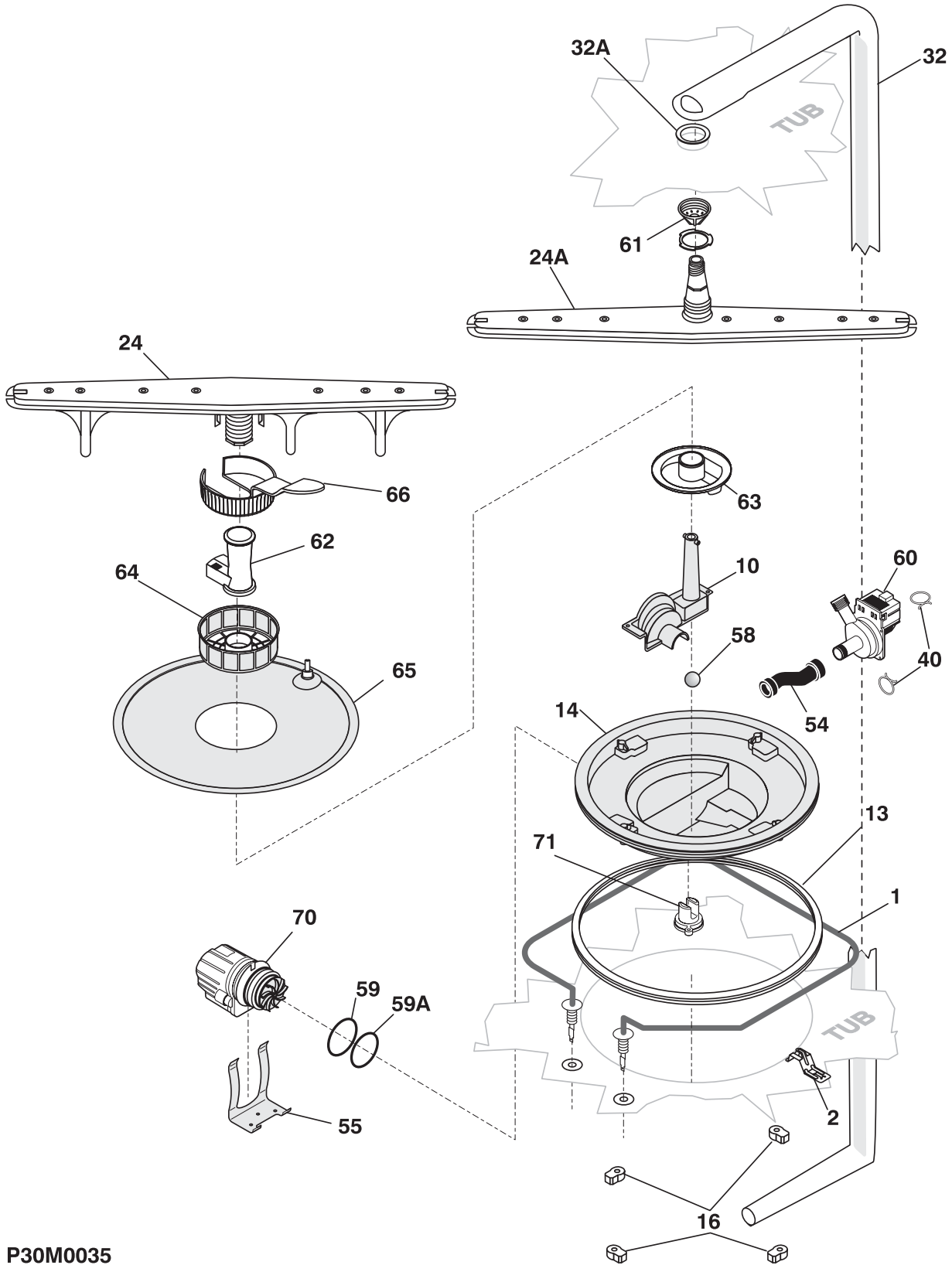

P30M0035

MOTOR & PUMP

POS. NO	PART NO.	DESCRIPTION
1 #	154247601	Heater
1*	154106201	Nut, heater, (2)
1*	154289801	Shield, heater terminal
2	154479601	Bracket, heater, (2)
10	154245501	Cover, volute
13	154246801	Gasket, sump
14	154365901	Housing, sump
16	154246502	Retainer, sump
24	154414101	Spray arm, lower, w/heat shield
24A	154313601	Spray arm, center
24A*	154252001	Nut, spray arm, center
32	154406601	Tube, delivery
32A	154406401	Gasket, delivery tube
40	154348401	Clamp, red, pump
40	154348502	Clamp, red, pump
40*	154106801	Clamp, hose, (2)
40*	154380601	Clamp, hose, (1)
54	154234401	Hose, connector
55	154362301	Bracket, motor, askoll
55*	5303316032	Screw, truss ss, 8 .625
58	154246402	Check ball
59	154246901	O-ring, rear
59A	154247001	O-ring, front
60	154474101	Drain Pump Assy
60*	154426201	Bracket, motor, drain
61	154406501	Nozzle, 3rd level, spray arm
62	154294101	Support, spray arm, lower
63	154252201	Base, soil director
64	154252301	Filter, soil director
65	154283004	Filter Assy
66	154252701	Trap, glass
70	154523501	Motor & Pump Assy
71 #	154473901	Sensor, turbidity
71*	154376001	O-ring, turbidity
*	154200601	Screw, #10-16 x 3/8

Functional Parts
* Non-Illustrated Parts

FRAME

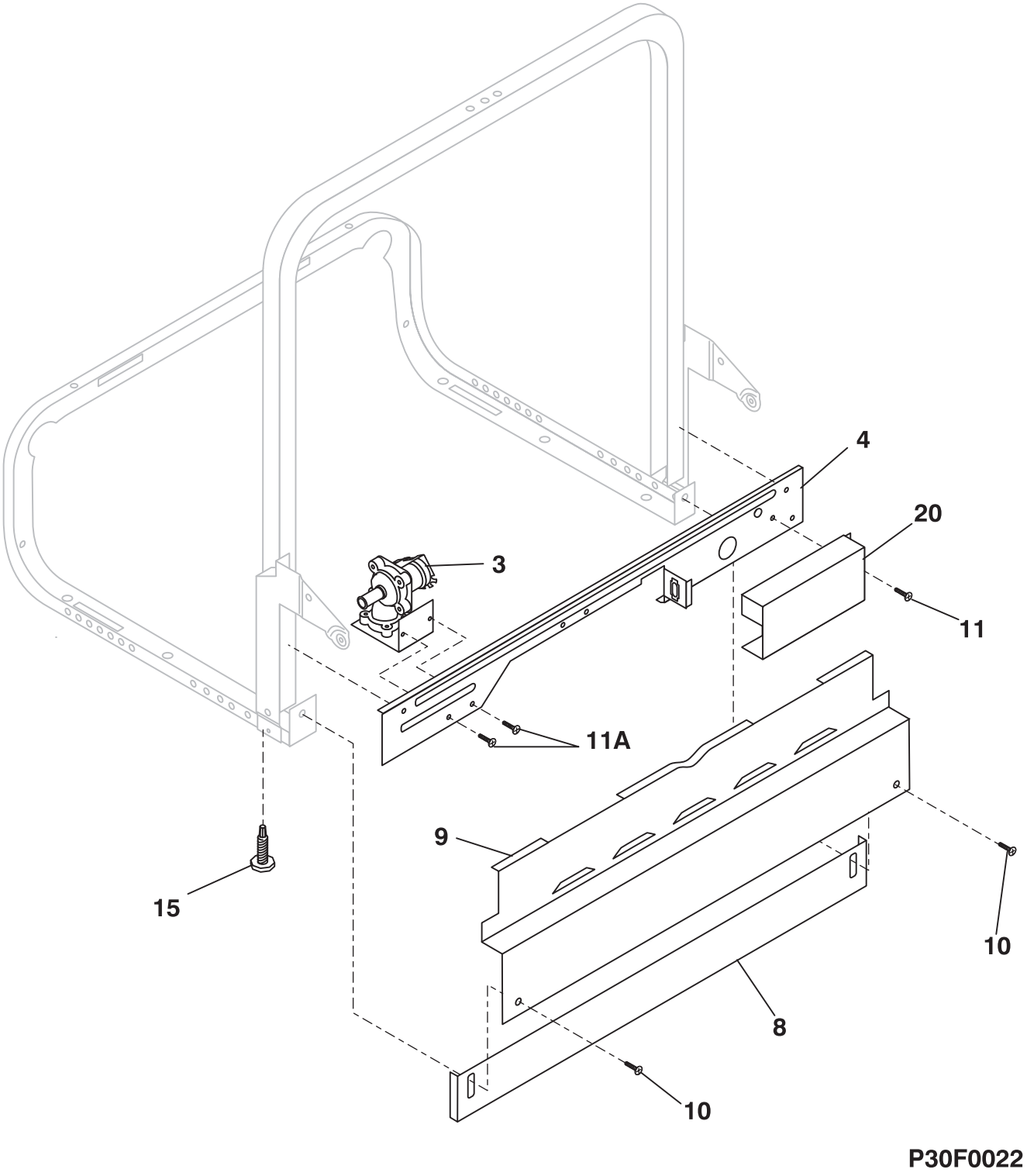

FRAME

POS. NO	PART NO.	DESCRIPTION
3 #	154445901	Valve, water
4	154208701	Brace, front frame
8	154322903	Toeplate, adjustable, black
9	154397203	Kickplate Assy, black, w/foam
10	5300808658	Screw, #8A x .375", black
11	154409401	Screw, #8-18 x .375
11A	154200601	Screw, #10-16 x 3/8
15	154419301	Screw, leveling
20	154209601	Cover, junction box
*	154412301	Baffle, sound
*	154290101	Guard, sound baffle, wire
*	154525201	Wire Guard, sound baffle
*	154041001	Screw, plask #1, 10-10 x 9/16
*	154200602	Screw, 10-16 x 3/8, hex

Functional Parts
* Non-Illustrated Parts

RACKS

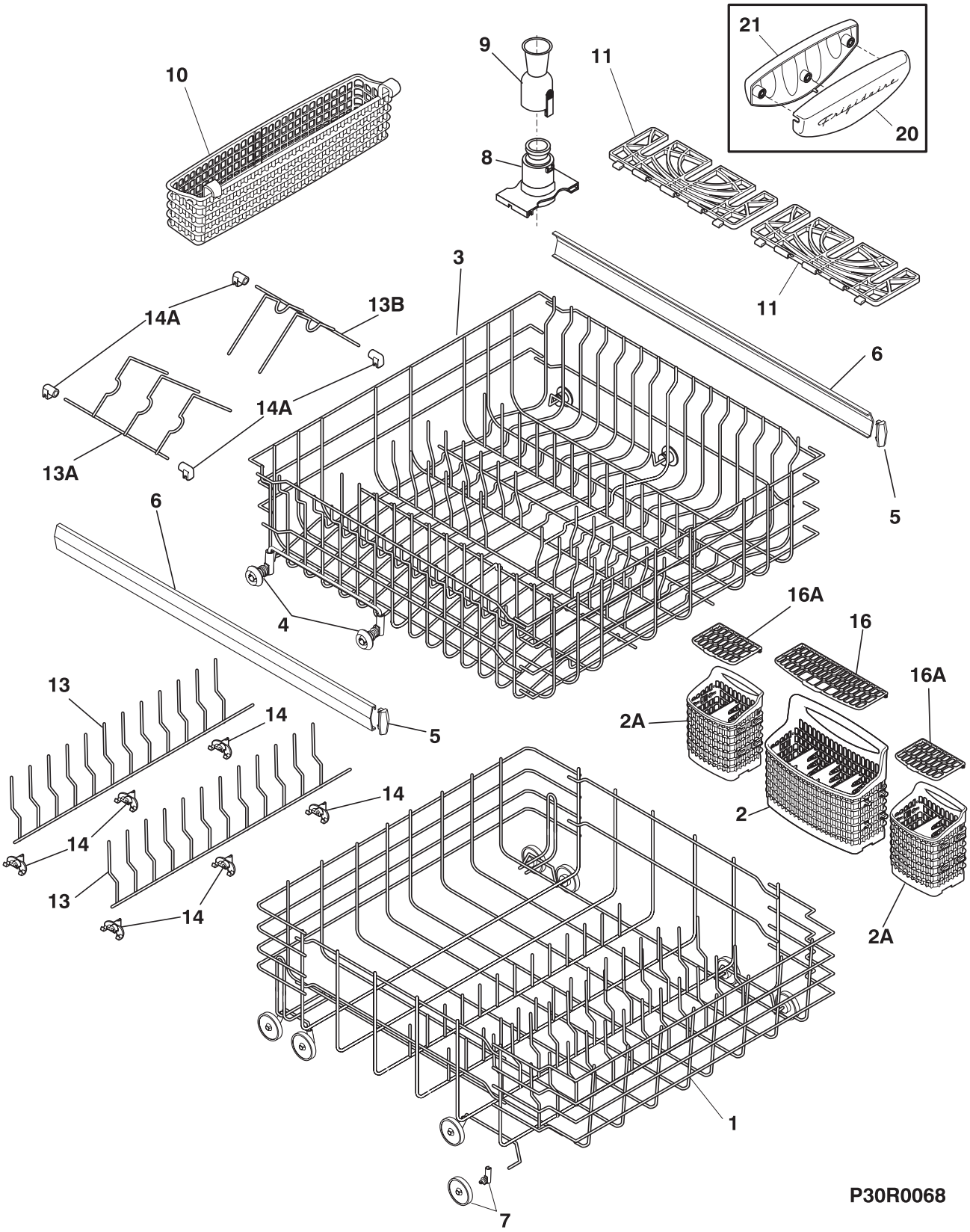
21
20
9
11
10
8
3
14A
13B
11
6
14A
13A
5
6
4
16A
16
13
14
5
2A
16A
14
14
2
14
13
14
2A
1
7
P30R0068

RACKS

POS. NO	PART NO.	DESCRIPTION
1	154432602	Rack assy, lower
2	154424001	Basket, silverware, main
2A	154424101	Basket, silverware, (2), side
3	154319519	Rack assy, upper
4	154522901	Wheel & bushing assy, upper rack, (8)
5	5300809927	Cap, slide, (4)
6	154232701	Slide, rack, (2)
7	154174502	Wheel & bracket assy, lower rack
8	154304001	Base, funnel
9	154251801	Funnel
10	154466901	Basket, utility, white
11	154436101	Shelf, cup, half width, white
13	154425502	Fence, fold down, lower rack, (2), full length
13A	154225403	Fence, multi, 3 wire, upper rack, (1)
13B	154225303	Fence, multi, 2 wire, upper rack, (1)
14	154428401	Bracket, fold down fence, lower rack, (6)
14A	154242001	Bracket, multi fence, white, upper rack, (8)
14A*	154242101	Bushing, multi fence, upper rack, (8)
16	154424201	Cover, main basket, silverware
16A	154424301	Cover, side basket, (2), silverware
20	154453101	Handle, pull, front, upper rack
21	154453201	Handle, pull, rear, upper rack